LE3S SERIES

LCD Multi-Function Multi-Range Digital

DIMENSIONS
MILLIMETERS

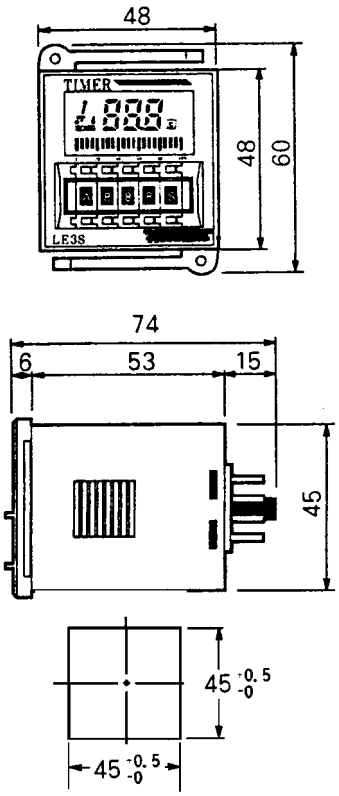

FEATURES

- **Operating Voltage Flexibility (100-240VAC or 24-240VDC)**
- **Ten Timing Modes**
- **Ten Timing Ranges**
- **Three Digit Digital Display**
- **0-100% Bar Graph Display**
- **Graphic Relay Contact Display**
- **5 Amp Relay Contacts**
- **1/16 DIN Front Panel**
- **Front Panel Mode/Range Selections**
- **Economically Priced**

OPERATION

The LE3S is a universal digital timer that features excellent application flexibility with 10 timing ranges and 10 counting modes that are front panel, user selectable. The LCD provides the operator a wide range of information; output relay contact status, time remaining during timing cycle, a bar graph that indicates percentage of elapsed time in the cycle, and time unit. The time preset is indicated on the pushwheel switches as is the time range and timing mode. The universal AC/DC input allows the LE3S to be powered by AC voltage from 90 to 240VAC (50/60 Hz.) or DC voltage from 24 to 240VDC. The 1/16 DIN size timer can be front panel mounted using supplied panel mount clips or it can be base mounted using an appropriate 8-Pin socket.

Two ON-Delay only models are also available; Model LE3SA which provides a DPDT timed output, and Model LE3SB which provides a SPDT timed output and a SPDT instantaneous output.

WIRING

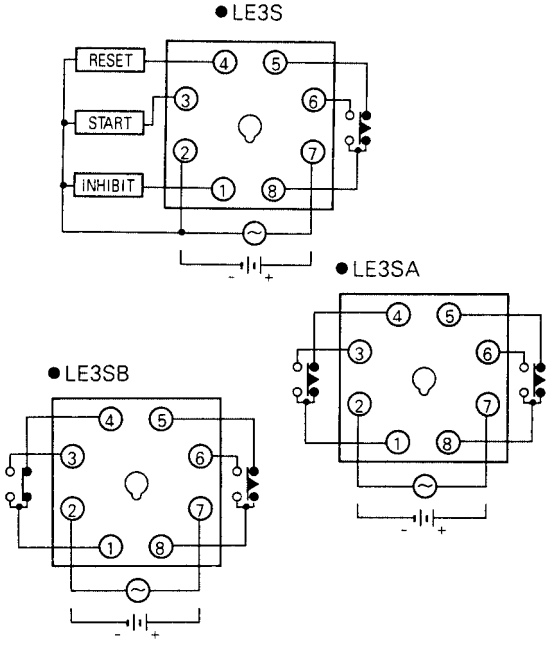

SPECIFICATIONS (All Models)

TIMING RANGES
0.01 Sec. to 9.99 Sec.
0.1 Sec. to 99.9 Sec.
1 Sec. to 999 Sec.
0.1 Min. to 99.9 Min.
1 Min. to 999 Min.
0.1 Hr. to 99.9 Hr.
1 Hr. to 999 Hr.
10 Hr. to 9990 Hr.
0 Min. 1 Sec. to 9 Min. 59 Sec.
0 Hr. 1 Min. to 9 Hr. 59 Min.

TIME SETTING
Front Panel Pushwheel Switch

TIME REPEAT ACCURACY
±0.005% Timing
±0.03 Sec. for Input Signals
±0.05 Sec. on Power Up

CONTROL VOLTAGE INITIATE TIME
0.05 Sec.

MEMORY
Non-Volatile Circuitry

POWER CONSUMPTION
5 VA

RELAY MECHANICAL LIFE
10 Million

DISPLAY
LCD Numeric & Graphic

TERMINATION
8-Pin Plug-In

MOUNTING
Front Panel or Plug-In Base

OPERATING TEMPERATURE
14° to 131°F (-10° to +55°C)

LE3SA ONLY

TIMING MODE
ON-Delay-Sustained Start

SELF RESET
10mS

OPERATING POWER
110VAC; Optional— 220VAC

RELAY OUTPUT
2 SPDT Timed

LE3S ONLY

TIMING MODES

(NO SWITCH LE3SA & B)

A On-Delay - Sustained Start
Resets with Either Reset Input or Removal of Start

B Interval Delay - Sustained Start
Resets with Either Reset Input or Removal of Start

C On-Delay - Momentary or Sustained Start
Resets Only With Reset Input

D Repeat Cycle - Off Time First - Sustained Start
Resets With Either Reset Input or Removal of Start

E Repeat Cycle - On Time First - Momentary or Sustained Start -
Reset Only With Reset Input

F Repetitive Pulse
Pulse Output 0.3 Sec. - Sustained or Momentary Start - Reset Only With Reset Input

H Off Delay
Reset With Reset Input or By Applying Start

K On/Off Delay
Really An Interval Function - Triggered By Applying Start and Again By Removing Start. Reset Only With Reset Input

L One Shot Output (Interval)
Sustained or Momentary Start - Reset With Reset Input or By Applying Start.

N Time Accumulation With Start Input -
Reset Only With Reset Input**RESET/START/INHIBIT INPUT**

TIME
0.02 Sec. Min.

SELF RESET
30mS

OPERATING POWER
90-264VAC, 50/60 Hz., 24-240VDC

RELAY OUTPUT
SPDT, 5A, 250VAC

LE3SB ONLY

TIMING MODE
On-Delay-Sustained Start

SELF RESET
10mS

OPERATING POWER
110 VAC; Optional—220VAC

RELAY OUTPUT
1 SPDT Timed
1 SPDT Instant

ORDERING INFORMATION

Part Number	Description
LE3S	Timer, Multi-Function, LCD 1/16 DIN
LE3SA-110	Timer, ON-Delay, 110VAC*, 2 DPDT Timed Outputs
LE3SB-110	Timer, ON-Delay, 110VAC*, 1SPDT Timed, 1SPDT Instant Outputs
A600-3-0011	Socket, 8 Pin, Panel Mount, Bottom Screw
A600-3-0013	Socket, 8 Pin, DIN Rail, Top Screw
	*220VAC Available